Venus

750

SH - 1408

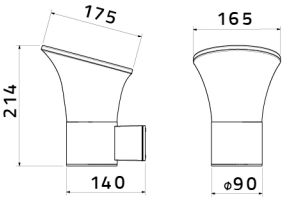

1900

1150

800

SH - 1407

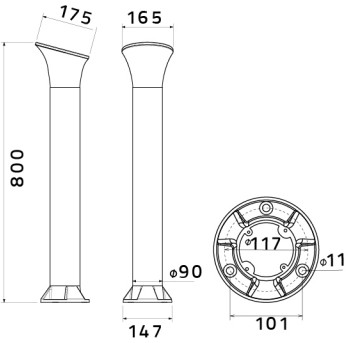

SH - 1406

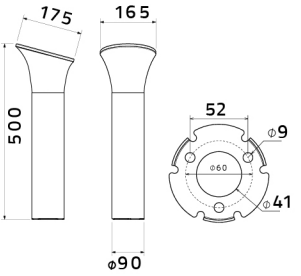

SH - 1405

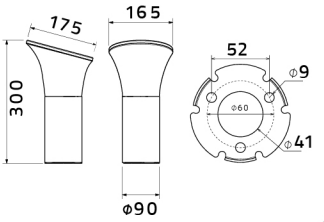

E27 IP 54 9W LED 230V 50Hz Class I

Garden Lights

Venus

750

SH - 1408

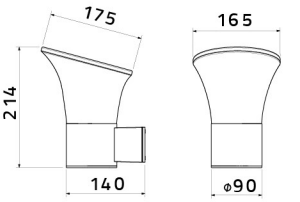

1900

1150

800

SH - 1407

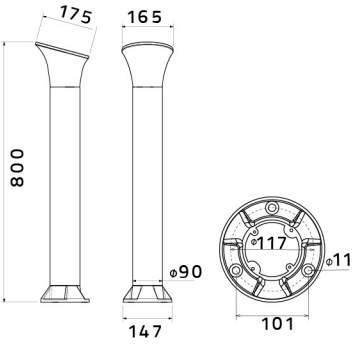

SH - 1406

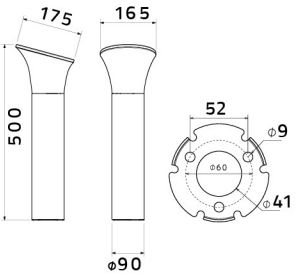

SH - 1405

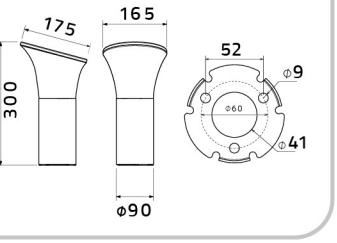

E27
IP 54
9W LED
230V 50Hz
Class I

Garden Lights

750

SH - 1408

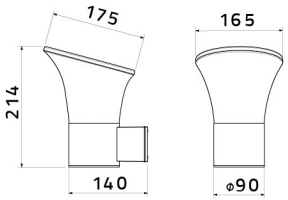

800

1150

1900

SH - 1405

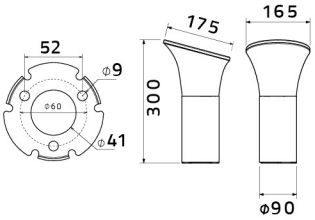

SH - 1406

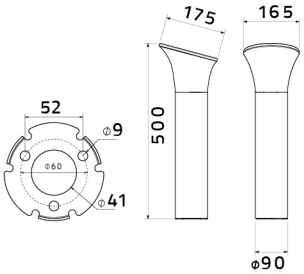

SH - 1407

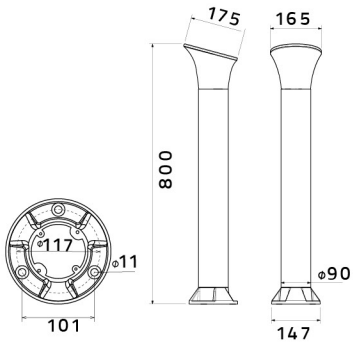

E27
9W LED
IP 54
Class I
230V 50Hz

Garden Lights