SH-2x400

Prod. Code	SH-2x400-HPS	SH-2x400-MH
Voltage	220V	220V
Watt	2x400W	2x400W
Base	2xE40	2xE40
Lamp	High Pressure Sodium	Metal Halide
Material	Aluminum	Aluminum
Body Color	White, Black	White, Black
IP	55	55

Applications:

Residential Areas:
decoration and highlight in building facades
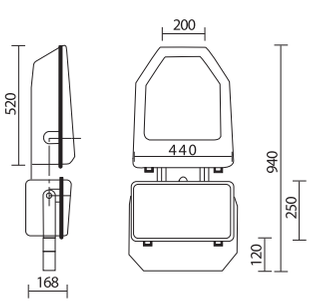
Large Areas:
pathways, bridges, garden, parks, lawns, parking grounds, machine rooms, stores, billboards, sport grounds, common areas